Ramer
PRODUCTS, INC

FITTINGS FOR PRODUCTION LEAK TESTING AND CHARGING FOR THE REFRIGERATION, AIR CONDITIONING AND AUTOMOTIVE INDUSTRIES

Latest Techniques and Special Requirements

RAMSEAL® fittings are designed for production testing and charging applications requiring safe, leak-free connections. RAMER utilizes a combination of efficient rubber seals and fast-holding collets to provide the tightest grip and seal available. Although we specialize in standard, high-volume connectors, RAMER has over 40 years of experience in designing and manufacturing specialized connectors for custom applications. RAMER connectors are well suited for today's sensitive leak testing systems including hydrogen detection, helium mass spectrometry and pressure decay.

Positive Sealing

The cam-action handle causes a flexible collet to grip the tube while a rubber seal is compressed around the ID or OD of the tube. This forms a positive seal and distributes the forces over the entire circumference to minimize tube distortion or damage.

Easy to Use

RAMER test fittings are made for a variety of production test applications. The cam-action handle activates the gripping and sealing functions quickly and safely. Each fitting is specially sized for its application. Most components are hard coated aircraft aluminum and Teflon® treated for long wear and corrosion resistance. Minimal maintenance is required, and worn seals are easily replaced.

Pressure-Assist Safety Feature

Many RAMER test fittings are equipped with pressure-assist: as pressure increases, the mechanical gripping and sealing components become more effective. This tighter seal is safer and more efficient with today's sensitive leak testing methods. The tool will not release until pressure decreases to a safe level.

OPTIONAL SAFETY CHAINS AVAILABLE

While Ramer fittings have been designed with safety in mind, it is recommended that in plant safety precautions be implemented and observed

LIMITED WARRANTY

Ramer's limited Warranty covers material and workmanship only. All other warranties express or implied, including merchantability and fitness for a particular purpose, are expressively excluded. This limited warranty expires 90 days after shipment and Ramer's sole obligation is to repair or replace defective parts if notice is received within the 90 day warranty period. There are no other warranties which extend beyond the description on the face hereof.

SERIES FEATURES:

ID Sealing OD Gripping

+ Designed for helium leak testing
+ Contains no O–rings or quad–rings to be permeated by test media
+ Opposing force of collet and seal minimize tube distortion or damage
+ Vacuum to 10 microns

Model	Maximum Pressure	
121–122	750 PSI	53Kg/cm², 52 Bar
123–124	350 PSI	25Kg/cm², 24 Bar
125	250 PSI	18Kg/cm², 17 Bar

SERIES 12

FOR CHARGING OR PLUGGING SHORT, STRAIGHT, OR EXPANDED TUBES

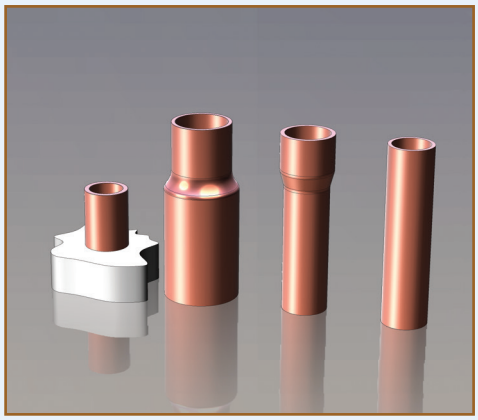

SERIES FEATURES:

ID Sealing OD Gripping

+ Opposing forces of collet and seal minimize tube distortion or damage
+ Vacuum to 10 microns

US PATENT 4,154,465 | CANADIAN PATENT 1,077,082

Model	Maximum Pressure	
131–132	750 PSI	53Kg/cm², 52 Bar

SERIES 13

FOR PLUGGING SHORT, STRAIGHT, OR EXPANDED TUBES

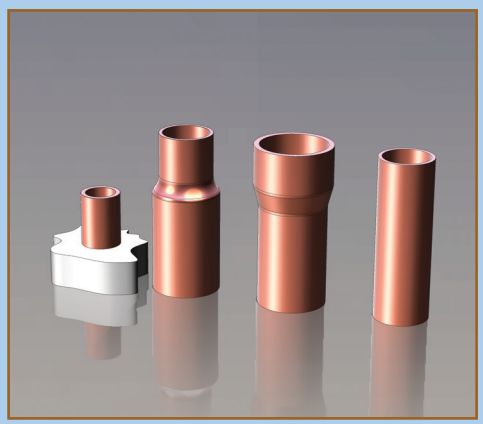

Ramer PRODUCTS, INC
www.ramerproducts.com

SERIES **14** **PREFERRED SERIES**

FOR CHARGING OR PLUGGING SHORT, STRAIGHT, OR EXPANDED TUBES

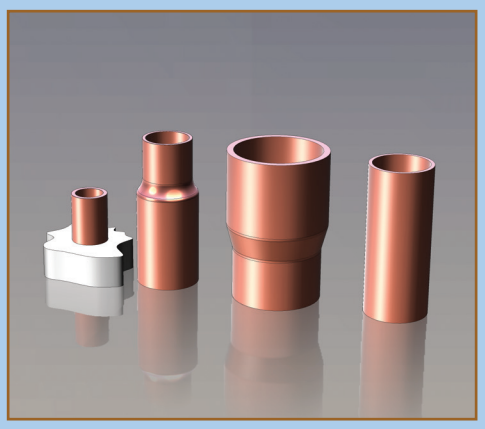

SERIES FEATURES:

ID Sealing OD Gripping

+ Opposing forces of collet and seal minimize tube distortion or damage
+ Pressure-assist feature enables tool to grip and seal more effectively as pressure increases. Tool will not release until pressure decreases to safe level
+ Vacuum to 10 microns

US PATENT 4,154,465 | CANADIAN PATENT 1,077,082

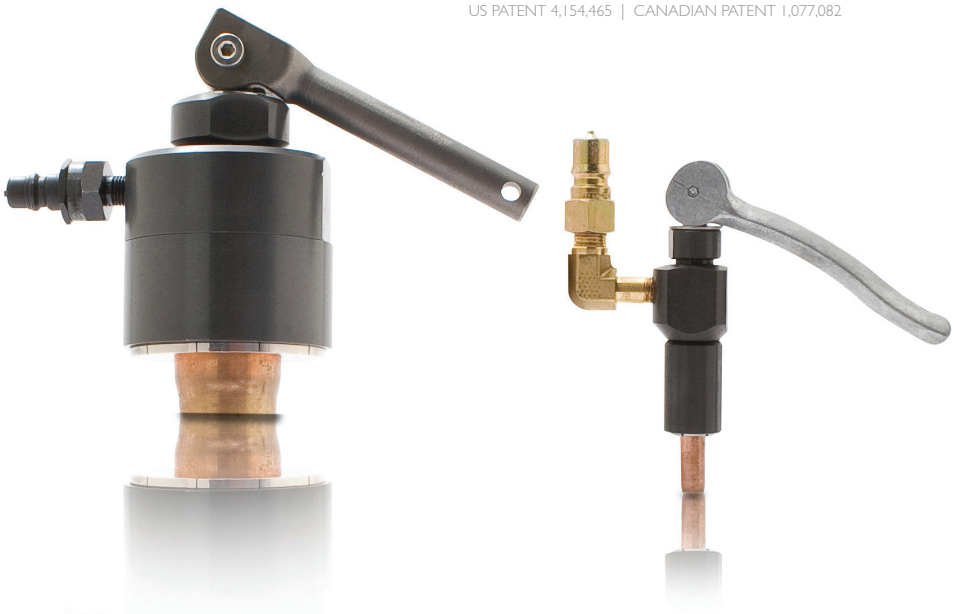

Models 131 and 132 may be substituted for models 141 or 142 for plugging purposes.
For 143-149 plugging, use a pipe plug in air inlet port.

Choosing Your Model

Tube OD is the first consideration in determining the proper model of the 12, 13 or 14 series tool. Using the appropriate chart, select the model closest to your tube OD. Then find the seal nearest the tube "ID" and the collet nearest the tube OD. The seal and collet sizes then follow the model number to complete the tool description.

For example: If your tube OD is .753", find the nearest collet size, which is .750". This indicates that the model will be a 143. Next find the closest seal size to your actual tube ID. If your ID is .638", the closest seal will be .635". From this information you can determine the exact tool description as shown here. Use the model number (143) followed by the seal (.635) and collet size (.750). A tube with these dimensions would require Model 143-.635x.750.

Note: In the case of a seal falling midway between two sizes, select the smaller size. When a collet is midway between sizes, select the larger.

Model	Maximum Pressure	
141-146	750 PSI	53Kg/cm², 52 Bar
147-149	600 PSI	42Kg/cm², 41 Bar

Ramer PRODUCTS, INC
www.ramerproducts.com

SERIES **12-13-14**

Model	Tube ID Range				Tube OD Range			
	Inches		Seal	mm	Inches		Collet	mm
	0.306 - 0.325		**0.315**	7.77 - 8.26	0.320 - 0.339		**0.330**	8.13 - 8.61
	0.326 - 0.345		**0.335**	8.27 - 8.76	0.340 - 0.359		**0.350**	8.62 - 9.12
121	0.346 - 0.365		**0.355**	8.77 - 9.27	0.360 - 0.379		**0.370**	9.13 - 9.63
131	0.366 - 0.385		**0.375**	9.28 - 9.78	0.380 - 0.399		**0.390**	9.64 - 10.13
141	0.386 - 0.405		**0.395**	9.79 - 10.29	0.400 - 0.419		**0.410**	10.14 - 10.64
	0.406 - 0.425		**0.415**	10.30 - 10.80	0.420 - 0.439		**0.430**	10.65 - 11.15
	0.426 - 0.445		**0.435**	10.81 - 11.30	0.440 - 0.459		**0.450**	11.16 - 11.66
	0.446 - 0.465		**0.455**	11.31 - 11.81	0.460 - 0.479		**0.470**	11.67 - 12.17
	0.466 - 0.485		**0.475**	11.82 - 12.32	0.480 - 0.499		**0.490**	12.18 - 12.67
	0.486 - 0.505		**0.495**	12.33 - 12.83	0.500 - 0.519		**0.510**	12.68 - 13.18
122	0.506 - 0.525		**0.515**	12.84 - 13.34	0.520 - 0.539		**0.530**	13.19 - 13.69
132	0.526 - 0.545		**0.535**	13.35 - 13.84	0.540 - 0.559		**0.550**	13.70 - 14.20
142	0.546 - 0.565		**0.555**	13.85 - 14.35	0.560 - 0.579		**0.570**	14.21 - 14.71
	0.566 - 0.585		**0.575**	14.36 - 14.86	0.580 - 0.599		**0.590**	14.72 - 15.21
	0.586 - 0.605		**0.595**	14.87 - 15.37	0.600 - 0.619		**0.610**	15.22 - 15.72
	0.606 - 0.625		**0.615**	15.38 - 15.88	0.620 - 0.639		**0.630**	15.73 - 16.23
	0.626 - 0.645		**0.635**	15.89 - 16.38	0.640 - 0.659		**0.650**	16.24 - 16.74
	0.646 - 0.665		**0.655**	16.39 - 16.89	0.660 - 0.679		**0.670**	16.75 - 17.25
	0.666 - 0.685		**0.675**	16.90 - 17.40	0.680 - 0.699		**0.690**	17.26 - 17.75
	0.686 - 0.705		**0.695**	17.41 - 17.91	0.700 - 0.719		**0.710**	17.76 - 18.26
123	0.706 - 0.725		**0.715**	17.92 - 18.42	0.720 - 0.739		**0.730**	18.27 - 18.77
143	0.726 - 0.745		**0.735**	18.43 - 18.92	0.740 - 0.759		**0.750**	18.78 - 19.28
	0.746 - 0.765		**0.755**	18.93 - 19.43	0.760 - 0.779		**0.770**	19.29 - 19.79
	0.766 - 0.785		**0.775**	19.44 - 19.94	0.780 - 0.799		**0.790**	19.80 - 20.29
	0.786 - 0.805		**0.795**	19.95 - 20.45	0.800 - 0.819		**0.810**	20.30 - 20.80
	0.806 - 0.825		**0.815**	20.46 - 20.96	0.820 - 0.839		**0.830**	20.81 - 21.31
	0.826 - 0.845		**0.835**	20.97 - 21.46	0.840 - 0.859		**0.850**	21.32 - 21.82
	0.846 - 0.865		**0.855**	21.47 - 21.97	0.860 - 0.879		**0.870**	21.83 - 22.33
	0.866 - 0.885		**0.875**	21.98 - 22.48	0.880 - 0.899		**0.890**	22.34 - 22.83
	0.886 - 0.905		**0.895**	22.49 - 22.99	0.900 - 0.919		**0.910**	22.84 - 23.34
124	0.906 - 0.925		**0.915**	23.00 - 23.50	0.920 - 0.939		**0.930**	23.35 - 23.85
144	0.926 - 0.945		**0.935**	23.51 - 24.00	0.940 - 0.959		**0.950**	23.86 - 24.36
	0.946 - 0.965		**0.955**	24.01 - 24.51	0.960 - 0.979		**0.970**	24.37 - 24.87
	0.966 - 0.985		**0.975**	24.52 - 25.02	0.980 - 0.999		**0.990**	24.88 - 25.37
	0.986 - 1.005		**0.995**	25.03 - 25.53	1.000 - 1.019		**1.010**	25.38 - 25.88
	1.006 - 1.025		**1.015**	25.54 - 26.04	1.020 - 1.039		**1.030**	25.89 - 26.39
	1.026 - 1.045		**1.035**	26.05 - 26.54	1.040 - 1.059		**1.050**	26.40 - 26.90
	1.046 - 1.065		**1.055**	26.55 - 27.05	1.060 - 1.079		**1.070**	26.91 - 27.41
	1.066 - 1.085		**1.075**	27.06 - 27.56	1.080 - 1.099		**1.090**	27.42 - 27.91
	1.086 - 1.105		**1.095**	27.57 - 28.07	1.100 - 1.119		**1.110**	27.92 - 28.42
	1.106 - 1.125		**1.115**	28.08 - 28.58	1.120 - 1.139		**1.130**	28.43 - 28.93
125	1.126 - 1.145		**1.135**	28.59 - 29.08	1.140 - 1.159		**1.150**	28.94 - 29.44
145	1.146 - 1.165		**1.155**	29.09 - 29.59	1.160 - 1.179		**1.170**	29.45 - 29.95
	1.166 - 1.185		**1.175**	29.60 - 30.10	1.180 - 1.199		**1.190**	29.96 - 30.45
	1.186 - 1.205		**1.195**	30.11 - 30.61	1.200 - 1.219		**1.210**	30.46 - 30.96
	1.206 - 1.225		**1.215**	30.62 - 31.12	1.220 - 1.239		**1.230**	30.97 - 31.47
	1.226 - 1.245		**1.235**	31.13 - 31.62	1.240 - 1.259		**1.250**	31.48 - 31.98
	1.246 - 1.265		**1.255**	31.63 - 32.13	1.260 - 1.279		**1.270**	31.99 - 32.49
	1.266 - 1.285		**1.275**	32.14 - 32.64	1.280 - 1.299		**1.290**	32.50 - 32.99

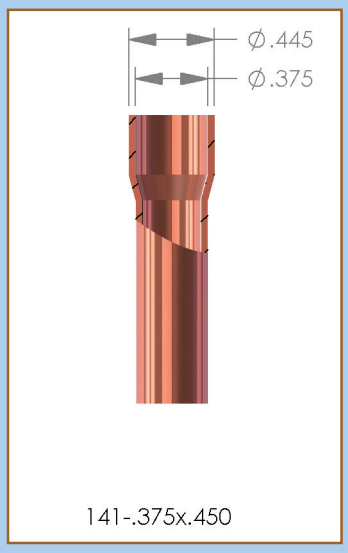

141-.375x.450

143-.635x.730

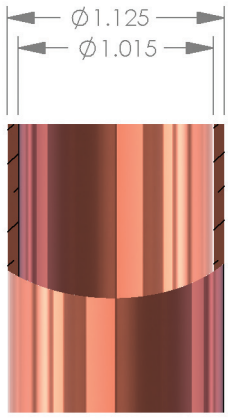

145-1.015x1.130

Model	Tube ID Range					Tube OD Range				
	Inches		Seal	mm		Inches		Collet	mm	
146	1.286	1.305	1.295	32.65	33.15	1.300	1.319	1.310	33.00	33.50
	1.306	1.325	1.315	33.16	33.66	1.320	1.339	1.330	33.51	34.01
	1.326	1.345	1.335	33.67	34.16	1.340	1.359	1.350	34.02	34.52
	1.346	1.365	1.355	34.17	34.67	1.360	1.379	1.370	34.53	35.03
	1.366	1.385	1.375	34.68	35.18	1.380	1.399	1.390	35.04	35.53
	1.386	1.405	1.395	35.19	35.69	1.400	1.419	1.410	35.54	36.04
	1.406	1.425	1.415	35.70	36.20	1.420	1.439	1.430	36.05	36.55
	1.426	1.445	1.435	36.21	36.70	1.440	1.459	1.450	36.56	37.06
	1.446	1.465	1.455	36.71	37.21	1.460	1.479	1.470	37.07	37.57
	1.466	1.485	1.475	37.22	37.72	1.480	1.499	1.490	37.58	38.07
	1.486	1.505	1.495	37.73	38.23	1.500	1.519	1.510	38.08	38.58
	1.506	1.525	1.515	38.24	38.74	1.520	1.539	1.530	38.59	39.09
	1.526	1.545	1.535	38.75	39.24	1.540	1.559	1.550	39.10	39.60
	1.546	1.565	1.555	39.25	39.75	1.560	1.579	1.570	39.61	40.11
	1.566	1.585	1.575	39.76	40.26	1.580	1.599	1.590	40.12	40.61
	1.586	1.605	1.595	40.27	40.77	1.600	1.619	1.610	40.62	41.12
	1.606	1.625	1.615	40.78	41.28	1.620	1.639	1.630	41.13	41.63
147	1.486	1.505	1.495	37.74	38.23	1.640	1.659	1.650	41.66	42.14
	1.506	1.525	1.515	38.25	38.74	1.660	1.679	1.670	42.16	42.65
	1.526	1.545	1.535	38.76	39.24	1.700	1.719	1.710	43.18	43.66
	1.566	1.585	1.575	39.78	40.26	1.720	1.739	1.730	43.69	44.17
	1.606	1.625	1.615	40.79	41.28	1.740	1.759	1.750	44.20	44.68
	1.626	1.645	1.635	41.30	41.78	1.760	1.779	1.770	44.70	45.19
	1.646	1.665	1.655	41.81	42.29	1.780	1.799	1.790	45.21	45.69
	1.666	1.685	1.675	42.32	42.80	1.800	1.819	1.810	45.72	46.20
	1.766	1.785	1.775	44.86	45.34	1.820	1.839	1.830	46.23	46.71
	1.926	1.945	1.935	48.92	49.40	1.860	1.879	1.870	47.24	47.73
	1.946	1.965	1.955	49.43	49.91	1.880	1.899	1.890	47.75	48.23
	1.966	1.985	1.975	49.94	50.42	1.900	1.919	1.910	48.26	48.74
	1.986	2.005	1.995	50.44	50.93	1.920	1.939	1.930	48.77	49.25
148	2.006	2.025	2.015	50.95	51.44	2.100	2.119	2.110	53.34	53.82
	2.046	2.065	2.055	51.97	52.45	2.120	2.139	2.130	53.85	54.33
	2.066	2.085	2.075	52.48	52.96	2.140	2.159	2.150	54.36	54.84
	2.106	2.125	2.115	53.49	53.98	2.240	2.259	2.250	56.90	57.38
	2.126	2.145	2.135	54.00	54.48	2.260	2.279	2.270	57.40	57.89
	2.146	2.165	2.155	54.51	54.99	2.280	2.299	2.290	57.91	58.39
	2.366	2.385	2.375	60.10	60.58	2.300	2.319	2.310	58.42	58.90
	2.426	2.445	2.435	61.62	62.10	2.320	2.339	2.330	58.93	59.41
	2.446	2.465	2.455	62.13	62.61	2.340	2.359	2.350	59.44	59.92
	2.466	2.485	2.475	62.64	63.12	2.360	2.379	2.370	59.94	60.43
	2.486	2.505	2.495	63.14	63.63	2.380	2.399	2.390	60.45	60.93
	2.506	2.525	2.515	63.65	64.14	2.480	2.499	2.490	62.99	63.47
	2.526	2.545	2.535	64.16	64.64	2.500	2.519	2.510	63.50	63.98
	2.566	2.585	2.575	65.18	65.66	2.560	2.579	2.570	65.02	65.51
	2.586	2.605	2.595	65.68	66.17	2.620	2.639	2.630	66.55	67.03
	2.606	2.625	2.615	66.19	66.68	2.740	2.759	2.750	69.60	70.08
	2.626	2.645	2.635	66.70	67.18	2.760	2.779	2.770	70.10	70.59
	2.646	2.665	2.655	67.21	67.69	2.780	2.799	2.790	70.61	71.09
149	2.906	2.925	2.915	73.81	74.30	2.800	2.819	2.810	71.12	71.60
	2.926	2.945	2.935	74.32	74.80	2.820	2.839	2.830	71.63	72.11
	2.946	2.965	2.955	74.83	75.31	2.840	2.859	2.850	72.14	72.62
	2.966	2.985	2.975	75.34	75.82	2.860	2.879	2.870	72.64	73.13
	3.106	3.125	3.115	78.89	79.38	3.120	3.139	3.130	79.25	79.73
	3.126	3.145	3.135	79.40	79.88	3.300	3.319	3.310	83.82	84.30

146-1.375x1.510

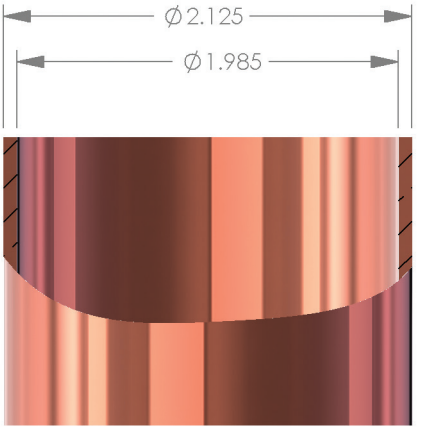

148-1.975x2.130

Additional sizes available at
www.ramerproducts.com/14series

SERIES 30 FOR SEALING OF TUBES UNDER LOW PRESSURE

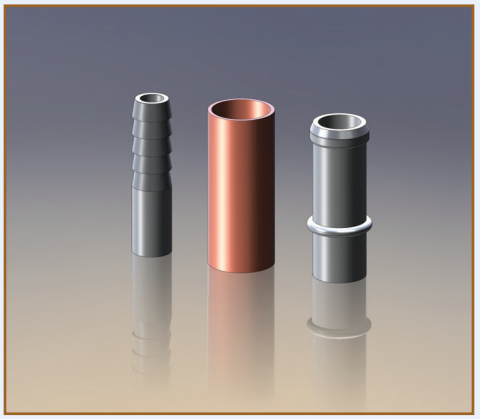

SERIES FEATURES:

OD Sealing

+ Excellent for low pressure, barbed, or beaded tubes
+ Cam-action color-coded handles for instant size recognition
+ Vacuum to 10 microns

Automatic and Pilot Pressure Versions Available

Model	Maximum Pressure	
30	100 PSI	7Kg/cm², 7 Bar

SERIES 40 PREFERRED SERIES FOR GRIPPING AND SEALING OF STRAIGHT TUBES

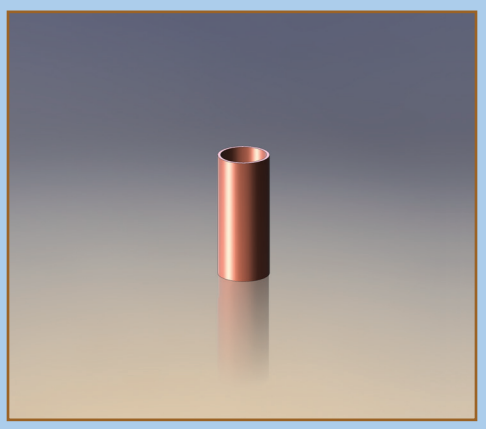

SERIES FEATURES:

OD Gripping OD Sealing

+ Seals on OD rather than on the end of tubes for longer seal life
+ Cam-action color-coded handles for instant size recognition
+ Vacuum to 10 microns

Automatic and Pilot Pressure Versions Available

Model	Maximum Pressure	
40	750 PSI	53Kg/cm², 52 Bar
41-42	500 PSI	35Kg/cm², 34 Bar

SERIES FEATURES:

OD Gripping End Sealing

+ End sealing for Short tube engagement
+ Cam-action color-coded handles for instant size recognition

US PATENT 3,779,586 AND 3,868,132

Automatic and Pilot Pressure Versions Available

SERIES 50

FOR GRIPPING AND END SEALING OF SHORT TUBES

Tube OD Range

Model	Dash No.	Minimum	Inches	Maximum	Minimum	mm	Maximum
	1.5	0.084	0.094	0.104	2.13	2.38	2.64
	2	0.115	0.125	0.135	2.92	3.18	3.43
	2.2	0.131	0.141	0.151	3.32	3.57	3.83
30	2.5	0.146	0.156	0.166	3.72	3.97	4.22
40	2.7	0.162	0.172	0.182	4.11	4.37	4.62
	3	0.178	0.188	0.198	4.51	4.76	5.02
	3.5	0.209	0.219	0.229	5.30	5.56	5.81
	3.6	0.215	0.225	0.235	5.46	5.72	5.97
	3.8	0.228	0.238	0.248	5.78	6.03	6.29
	4	0.240	0.250	0.260	6.10	6.35	6.60
	4.2	0.253	0.263	0.273	6.41	6.67	6.92
	4.7	0.284	0.294	0.304	7.21	7.46	7.72
	5	0.303	0.313	0.323	7.68	7.94	8.19
	5.2	0.315	0.325	0.335	8.00	8.26	8.51
	5.5	0.334	0.344	0.354	8.48	8.73	8.99
30	5.6	0.340	0.350	0.360	8.64	8.89	9.14
40	5.7	0.346	0.356	0.366	8.80	9.05	9.30
50	6	0.365	0.375	0.385	9.27	9.53	9.78
	6.2	0.378	0.388	0.398	9.59	9.84	10.10
	6.5	0.396	0.406	0.416	10.07	10.32	10.57
	6.8	0.415	0.425	0.435	10.54	10.80	11.05
	7	0.428	0.438	0.448	10.86	11.11	11.37
	7.2	0.440	0.450	0.460	11.18	11.43	11.68
	7.5	0.459	0.469	0.479	11.65	11.91	12.16
	7.8	0.478	0.488	0.498	12.13	12.38	12.64
	8	0.490	0.500	0.510	12.45	12.70	12.95
31	8.5	0.521	0.531	0.541	13.24	13.49	13.75
41	9	0.553	0.563	0.573	14.03	14.29	14.54
51	9.5	0.584	0.594	0.604	14.83	15.08	15.34
	10	0.615	0.625	0.635	15.62	15.88	16.13
	11	0.678	0.688	0.698	17.21	17.46	17.72
32	12	0.740	0.750	0.760	18.80	19.05	19.30
42	13	0.803	0.813	0.823	20.38	20.64	20.89
52	14	0.865	0.875	0.885	21.97	22.23	22.48
	15	0.928	0.938	0.948	23.56	23.81	24.07
	16	0.990	1.000	1.010	25.15	25.40	25.65

30-40-50 Series Standard Handle Color Codes

Dash No.	Size	Color
-1.5	3/32	Yellow
-2	1/8	Red
-3	3/16	Blue
-4	1/4	Black
-5	5/16	Beige
-6	3/8	Yellow
-7	7/16	Red

SERIES FEATURES:

ID Gripping ID Sealing

+ Grips and seals on the ID of tubes, blind holes and other restricted spaces
+ Vacuum to 10 microns

SERIES 80 FOR GRIPPING AND SEALING OF BLIND OPENINGS OR OTHER RESTRICTED SPACES

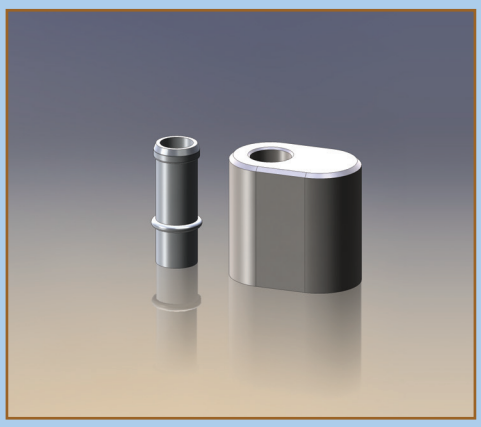

Fits Tube IDs of:

Model	SIZE	INCHES	mm
80	80-.390	0.380–0.400	9.65–10.16
	80-.442	0.432–0.452	10.97–11.48
	80-.485	0.475–0.495	12.07–12.57
	80-.505	0.495–0.515	12.57–13.08
	80-.535	0.525–0.545	13.34–13.84
	80-.568	0.558–0.578	14.17–14.68
81	81-.630	0.620–0.640	15.75–16.26
	81-.692	0.682–0.702	17.32–17.83
	81-.760	0.750–0.770	19.05–19.56
	81-.823	0.813–0.833	20.65–21.16
	81-.885	0.875–0.895	22.23–22.73
	81-.915	0.905–0.925	22.99–23.50

Model	Maximum Pressure
80-81	750 PSI 53Kg/cm², 52 Bar

Ramer PRODUCTS, INC
www.ramerproducts.com

SERIES 20

FOR GRIPPING AND SEALING OF BLIND OPENINGS OR OTHER RESTRICTED SPACES

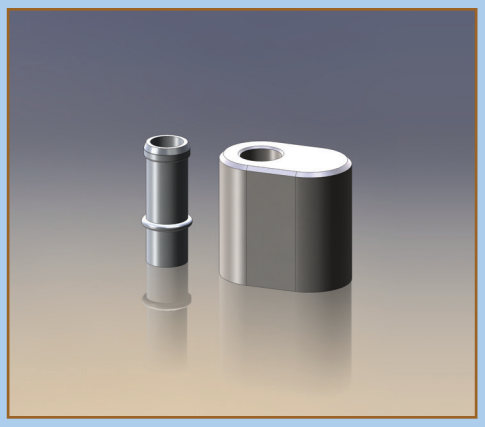

Fits Tube IDs of:

Model	Size	Inches	mm
201	201-.375	0.365–0.385	9.28–9.78
	201-.395	0.386–0.405	9.79–10.29
	201-.415	0.406–0.425	10.30–10.80
	201-.435	0.426–0.445	10.81–11.30
	201-.455	0.446–0.465	11.31–11.81
	201-.475	0.466–0.485	11.82–12.32
	201-.495	0.486–0.505	12.33–12.83
	201-.515	0.506–0.525	12.84–13.34
	201-.535	0.526–0.545	13.35–13.84
	201-.555	0.546–0.565	13.85–14.35
	201-.575	0.566–0.585	14.36–14.86
	201-.595	0.586–0.605	14.87–15.37
	201-.615	0.606–0.625	15.38–15.88
	201-.635	0.626–0.645	15.89–16.38
202	202-.635	0.626–0.645	15.89–16.38
	202-.655	0.646–0.665	16.39–16.89
	202-.675	0.666–0.685	16.90–17.40
	202-.695	0.686–0.705	17.41–17.91
	202-.715	0.706–0.725	17.92–18.42
	202-.735	0.726–0.745	18.43–18.92
	202-.755	0.746–0.765	18.93–19.43
	202-.775	0.766–0.785	19.44–19.94
	202-.795	0.786–0.805	19.95–20.45
	202-.815	0.806–0.825	20.46–20.96
	202-.835	0.826–0.845	20.97–21.46
	202-.855	0.846–0.865	21.47–21.97
	202-.875	0.866–0.885	21.98–22.48
	202-.895	0.886–0.905	22.49–22.99
	202-.915	0.906–0.925	23.00–23.50
	202-.935	0.926–0.945	23.51–24.00
	202-.955	0.946–0.965	24.01–24.51
	202-.975	0.966–0.985	24.52–25.02
203	203-.975	0.966–0.985	24.52–25.02
	203-.995	0.986–1.005	25.03–25.53
	203-1.015	1.006–1.025	25.54–26.04
	203-1.035	1.026–1.045	26.05–26.54
	203-1.055	1.046–1.065	26.55–27.05
	203-1.075	1.066–1.085	27.06–27.56
	203-1.095	1.086–1.105	27.57–28.07
	203-1.115	1.106–1.125	28.08–28.58
	203-1.135	1.126–1.145	28.59–29.08
	203-1.155	1.146–1.165	29.09–29.59
	203-1.175	1.166–1.185	29.60–30.10
	203-1.195	1.186–1.205	30.11–30.61
	203-1.215	1.206–1.225	30.62–31.12
	203-1.235	1.226–1.245	31.13–31.62
	203-1.255	1.246–1.265	31.63–32.13
	203-1.275	1.266–1.285	32.14–32.64
	203-1.295	1.286–1.305	32.65–33.15
	203-1.315	1.306–1.325	33.16–33.66
	203-1.335	1.326–1.345	33.67–34.16
	203-1.355	1.346–1.365	34.17–34.67
	203-1.375	1.366–1.385	34.68–35.18
204	204-1.395	1.386–1.405	35.20–35.69
	204-1.415	1.406–1.425	35.70–36.20
	204-1.435	1.426–1.445	36.21–36.70
	204-1.455	1.446–1.465	36.71–37.21
	204-1.475	1.466–1.485	37.22–37.72
	204-1.495	1.486–1.505	37.73–38.23

SERIES FEATURES:

ID Gripping ID Sealing

+ Grips and seals on the ID of tubes, blind holes and other restricted spaces
+ Pressure-assist feature enables tool to grip and seal more effectively as pressure increases. Tool will not release until pressure decreases to safe level
+ Vacuum to 10 microns

Model 201

Model 203

US PATENT 4,225,159 | CANADIAN PATENT 1,139,333

Model	Maximum Pressure	
201	750 PSI	53Kg/cm², 52 Bar
202	500 PSI	35Kg/cm², 34 Bar

Ramer PRODUCTS, INC
www.ramerproducts.com

SERIES FEATURES:

ID Sealing

+ Allows charging and low pressure testing of radiators and heat exchangers
+ Multiple sizes to fit radiator filler neck openings

SERIES 60 RADIATOR FILLER NECK FITTINGS

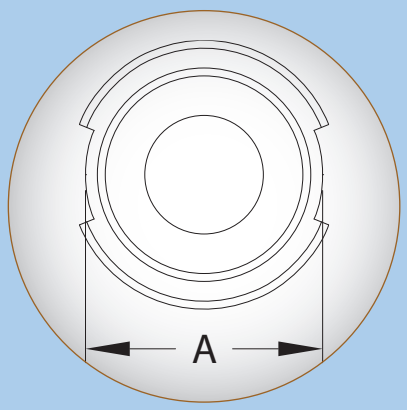

Size (A) Inches	Tool Number
1.5	60–18T
2	60–18
2.4	60–34
3.7	60–53

Ramer PRODUCTS, INC
www.ramerproducts.com

+SERIES 70

FOR PLUGGING OF RADIATOR INLET/OUTLET AND OTHER TYPES OF TUBING

+SERIES 77

FOR PLUGGING OR CHARGING OF RADIATOR INLET/OUTLET AND OTHER TYPES OF TUBING

Fits tube ID:

Model	Min.	Inches	Max	Ramer Dash No.	Min	mm	Max
	0.720	0.750	0.782	12	18.29	19.05	19.85
	0.783	0.813	0.844	13	19.86	20.64	21.44
	0.845	0.875	0.907	14	21.45	22.23	23.03
	0.908	0.938	0.969	15	23.04	23.81	24.61
	0.970	1.000	1.032	16	24.62	25.40	26.20
	1.033	1.063	1.094	17	26.21	26.99	27.79
	1.095	1.125	1.157	18	27.80	28.58	29.38
	1.158	1.188	1.219	19	29.39	30.16	30.96
	1.220	1.250	1.282	20	30.97	31.75	32.55
	1.283	1.313	1.344	21	32.56	33.34	34.14
	1.345	1.375	1.407	22	34.15	34.93	35.73
	1.408	1.438	1.469	23	35.74	36.51	37.31
	1.470	1.500	1.532	24	37.32	38.10	38.90
	1.533	1.563	1.594	25	38.91	39.69	40.49
	1.595	1.625	1.657	26	40.50	41.28	42.08
	1.658	1.688	1.719	27	42.09	42.86	43.66
	1.720	1.750	1.782	28	43.67	44.45	45.25
	1.783	1.813	1.844	29	45.26	46.04	46.84
	1.845	1.875	1.907	30	46.85	47.63	48.43
	1.908	1.938	1.969	31	48.44	49.21	50.01
	1.970	2.000	2.032	32	50.02	50.80	51.60
	2.033	2.063	2.094	33	51.61	52.39	53.19
70	2.095	2.125	2.157	34	53.20	53.98	54.78
77	2.158	2.188	2.219	35	54.79	55.56	56.36
	2.220	2.250	2.282	36	56.37	57.15	57.95
	2.283	2.313	2.344	37	57.96	58.74	59.54
	2.345	2.375	2.407	38	59.55	60.33	61.13
	2.408	2.438	2.469	39	61.14	61.91	62.71
	2.470	2.500	2.532	40	62.72	63.50	64.30
	2.533	2.563	2.594	41	64.31	65.09	65.89
	2.595	2.625	2.657	42	65.90	66.68	67.48
	2.658	2.688	2.719	43	67.49	68.26	69.06
	2.720	2.750	2.782	44	69.07	69.85	70.65
	2.783	2.813	2.844	45	70.66	71.44	72.24
	2.845	2.875	2.907	46	72.25	73.03	73.83
	2.908	2.938	2.969	47	73.84	74.61	75.41
	2.970	3.000	3.032	48	75.42	76.20	77.00
	3.033	3.063	3.094	49	77.01	77.79	78.59
	3.095	3.125	3.157	50	78.60	79.38	80.18
	3.158	3.188	3.219	51	80.19	80.96	81.76
	3.220	3.250	3.282	52	81.77	82.55	83.35
	3.283	3.313	3.344	53	83.36	84.14	84.94
	3.345	3.375	3.407	54	84.95	85.73	86.53
	3.408	3.438	3.469	55	86.54	87.31	88.11
	3.470	3.500	3.532	56	88.12	88.90	89.70
	3.533	3.563	3.595	57	89.71	90.49	91.30

SERIES FEATURES:

ID Sealing

+ For low pressure ID plugging or charging of radiator inlet/outlet and other types of tubing
+ Special sizes available
+ For ID charging of radiator inlet/outlet and other types of tubing

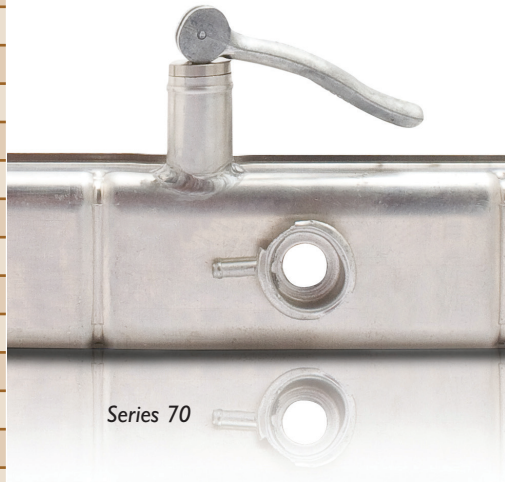

Series 70

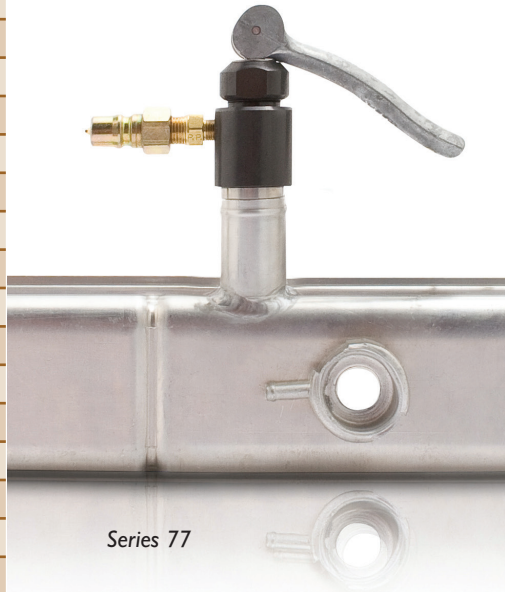

Series 77

Ramer PRODUCTS, INC

www.ramerproducts.com

Tool Specification Chart

Model Numbers	Minimum Straight Tube Req'd		Flow Restriction		Tool Length Closed		Inlet Port	Tool OD		Weight		Max Pressure	
	Inches	mm	Inches	mm	Inches	mm	Female	Inches	mm	Oz	Grams	PSI	Bar
121-122	0.360	9.1	0.09	2	4.5	114	1/8 NPT	1.25	32	12.0	340	750	52
123-124	0.460	11.7	0.22	6	4.5	114	1/8 NPT	1.62	41	15.8	449	350	24
125	0.560	14.2	0.22	6	5	127	1/8 NPT	1.98	50	18.2	517	250	17
131-132	0.360	9.1	DEADHEAD		3.1	79	N/A	1	25	6.9	195	750	52
141-142	0.360	9.1	0.09	2	4.3	109	1/8 NPT	1	25	8.8	249	750	52
143-144	0.460	11.7	0.12	3	4.9	124	1/8 NPT	1.62	41	14.4	408	750	52
145-146	0.560	14.2	0.22	6	4.9	124	1/4 NPT	2.25	57	22.3	633	750	52
147-149	0.860	21.8	0.31	8	6	152	1/4 NPT	3.98	101	92.1	2610	600	41
201	0.560	14.2	0.09	2	4.3	109	1/8 NPT	1	25	8.7	247	750	52
202	0.710	18.0	0.12	3	4.9	124	1/8 NPT	1.486	38	14.9	422	500	34
203	0.860	21.8	0.22	6	5.1	130	1/4 NPT	2	51	20.3	576	N/A	N/A
204	0.860	21.8	0.22	6	5.1	130	1/4 NPT	2	51	23.2	658	N/A	N/A
30	0.500	12.7	0.18	5	2.6	66	1/8 NPT	1	25	2.2	64	100	7
31	0.650	16.5	0.31	8	3.7	94	1/4 NPT	1.25	32	6.7	191	100	7
32	0.750	19.1	0.31	8	4	102	1/4 NPT	1.75	44	13.8	392	100	7
40	0.875	22.2	0.18	5	3	76	1/8 NPT	1	25	2.6	73	750	52
41	1.345	34.2	0.31	8	4.3	109	1/4 NPT	1.25	32	7.6	215	500	34
42	1.875	47.6	0.31	8	5	127	1/4 NPT	1.75	44	16.3	463	500	34
50	0.260	6.6	0.18	5	3	76	1/8 NPT	1	25	2.6	73	750	52
51	0.400	10.2	0.18	5	4.3	109	1/4 NPT	1.25	32	7.8	221	500	34
52	0.550	14.0	0.37	9	5	127	1/4 NPT	1.75	44	18.2	515	500	34
70	1.200	30.5	DEADHEAD		2.7	69	N/A	N/A	N/A	N/A	N/A	35	2
77	1.200	30.5	0.12	3	4.9	124	1/8 NPT	N/A	N/A	N/A	N/A	35	2
80	0.500	12.7	DEADHEAD		2.6	66	N/A	N/A	N/A	5.4	154	750	52
81	0.730	18.5	DEADHEAD		2.8	71	N/A	N/A	N/A	7.2	204	750	52
60	N/A		0.25	6	3.6	91	(2) 1/8 NPT	2.5	64	11.8	336	N/A	N/A

Worldwide Availability

Ramer connectors can be purchased through our main office or one of our worldwide sales offices. You can count on Ramer for same day shipping when necessary and for on-time delivery every time.

United States & Canada

Ramer Products, Inc.
400 Post Rd.
P.O. Box 435
Buchanan, MI 49107

Tel: 269-409-8583
Fax: 269-409-8630
E-mail: ramer@ramerproducts.com
Web: www.ramerproducts.com

Mexico

DIVERSITOOL, S.A. DE C.V.
Tel: 01 (81) 8365 1907
Fax: 01 (81) 8365 1907
CONTACT: Gorginio Peña Rodríguez
E-mail: gpena@diversitool.com
Web: www.diversitool.com

South America

VULKAN do Brasil LTDA
CONTACT: Mauro Mendonca
Tel: (Direct) 55-11-4894-7326
Cell: 55-11-98644-1270
Tel: 55-11-4894-7300
Fax: 55-11-4894-7329
E-mail: mauro.mendonca@vulkan.com

Mastercool do Brasil LTDA
CONTACT: André Oliveira
Tel: 55-11-4407-4017
Fax: 55-11-4407-4019
E-mail: andre@mastercool.com
Web: www.mastercool.com.br

Europe & Middle East

OAK EUROPA S.R.L.
CONTACT: Attilio Ziraldo
Tel: 39-0432-541443
Fax: 39-0432-401882
E-mail: aziraldo.oakeuro@iol.it
E-mail: sales@oakeuropa.191.it

Northern & Eastern Europe

OAK EUROPA NORDIC
Tel: 43-4257-20234
Fax: 43-4257-20237
E-mail: oen.chemicals@gmx.at

China & Southeast Asia

RAMER SINGAPORE OFFICE
CONTACT: Tony Koh
Tel: 65-6789-7789
Fax: 65-6789-7789
E-mail: tony@ramersg.com

Japan

Flair-Nagao Inc.
Tel: 011-81-46-281-5571
Fax: 011-81-46-281-5591
CONTACT: Makoto Ohmori
Web: www.flair-nagao.co.jp

Ramer
PRODUCTS, INC